SIZE	UNIT	PER CTMR DWG	DATE	REV.
A4	INCH	XXX	XX-XX-XX	X

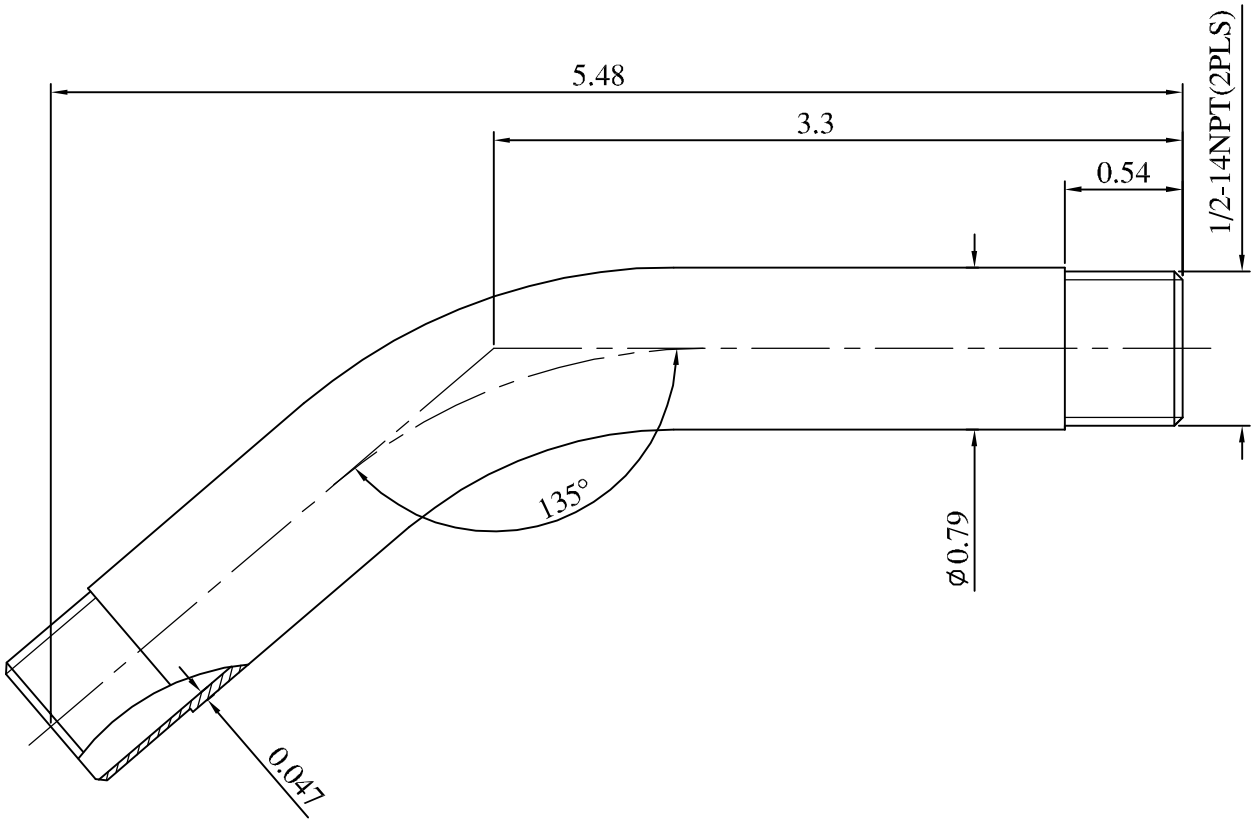

DO NOT SCALE DRAWING	C.S.B. INTERNATIONAL PRODUCTS INC.			
TOLERANCES : UNLESS OTHERWISE SPECIFIED . XX ± 0.010 ANGLES ± 1/2° . XXX ± 0.005 FRACTION ± 1/64	TITLE 1/2 *6"CHROME PLATED BRASS		DRAWN Makey 3/6/'18	APR.
W.T.: 85 gms	ITEM No.	REV.	SCALE 1 : 1 / PROJECTION	
MATERIAL : BRASS	626CHPL	A		
FINISH : CP			SHEET : 1 / 1	FILE XXX