SIZE	UNIT	PER CTMR DWG	DATE	REV.
A4	INCH	XXX	XX-XX-XX	X

SYM	DESCRIPTION	APR.	DATE
B	WAS 1/2-14 NPSM → 1/2-14 NPT	CTMR	01-07-'13

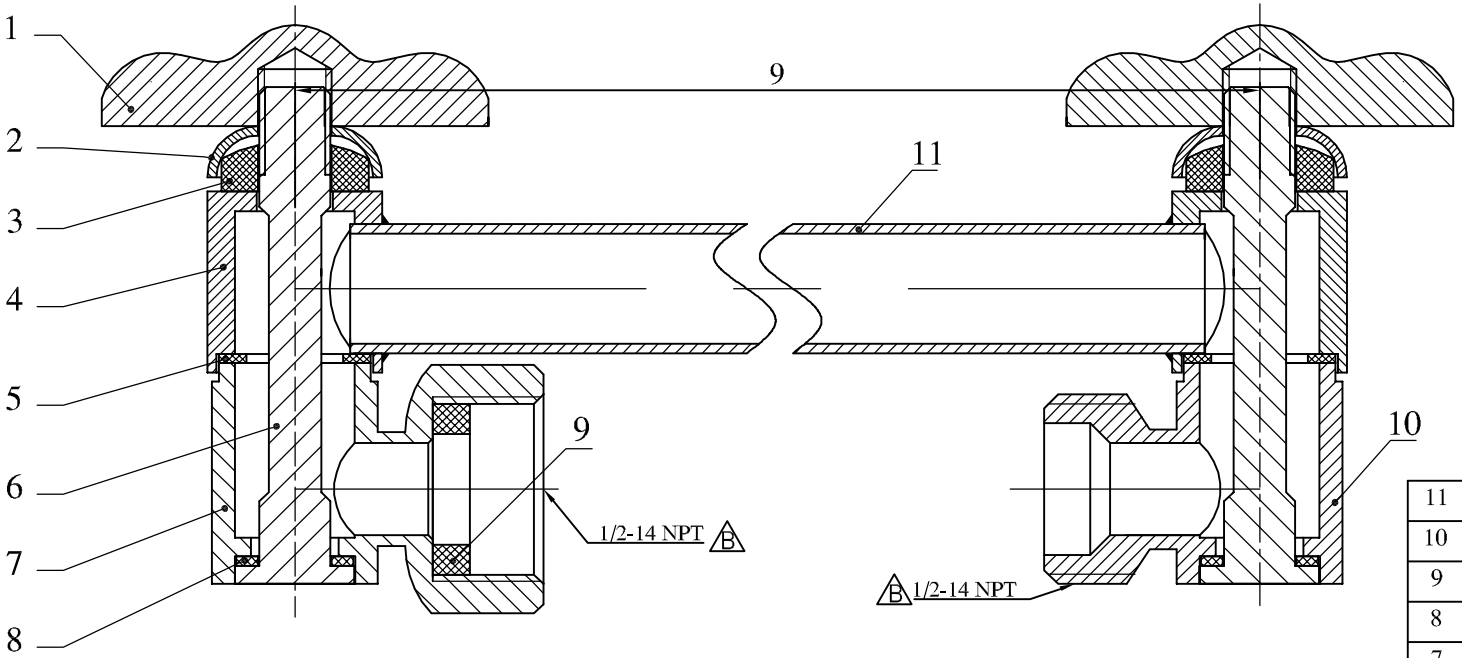

NO.	DESCRIPTION	Q'TY	MATERIAL	FINISH
11	TUBULAR	1	BRASS	CP
10	ADAPTER	1	BRASS	CP
9	WASHER	1	RUBBER	BLACK
8	WASHER	2	FIBER	RED
7	ADAPTER	1	BRASS	CP
6	BOLT	2	BRASS	CP
5	WASHER	2	FIBER	RED
4	CONNECTOR	2	BRASS	CP
3	GASKET	2	RUBBER	BLACK
2	COVER	2	BRASS	CP
1	HANDLE	2	ZINC	CP

DO NOT SCALE DRAWING

TOLERANCES :
UNLESS OTHERWISE SPECIFIED
. XX ± 0.010 | ANGLES ± 1/2°
. XXX ± 0.005 | FRACTION ± 1/64

W.T.:	270 gms
MATERIAL :	SEE LIST
FINISH :	SEE LIST

C.S.B. INTERNATIONAL PRODUCTS INC.

TITLE 1/2x9"ADJUSTABLE CHROME SHOWER

ITEM No. 629CHPL

REV. B

DRAWN Makey 3/6/'18

APR.

SCALE FREE

PROJECTION

SHEET : 1 / 1

FILE XXX